Florida's Top-Rated
Metal Roofing Supply Company

AMERICAN METAL SUPPLY
Custom Roofing Fabrication

863-202-8200
sales@americanmetalfl.com

INSTALLATION MANUAL

CONTENTS

3 **Metal Roofing by American Metal Supply**
- Panel Types
- Metal Options
- Paint and Color Options

4 **General Instructions**
- Storage and Handling
- Tools Required
- Safety

5 **Installation: Getting Started**
- Preparing the Roof Deck
- Typical Installation Process
- Setting the First Panel

6 **Installation: Fastening and Cutting**
- Fastening Metal Panels
- Field Cutting Metal Panels

7 **Reroofing**

8 **Care and Maintenance**

9 **Trim details: Eave**

10 **Trim details: Ridge or Hip**

11 **Trim details: Ridge (high side)**

12 **Trim details: Gable**

13 **Trim details: Valley**

14 **Trim Details: Transition**

15 **Trim Details: Sidewall**

16 **Trim Details: Endwall**

The details included in this guide are for general and illustrative use and may not be applicable in all environments and conditions. Note that specific projects or local jurisdictions may have alternate requirements. Always consult the local building code and specification documents for your project to ensure all applicable requirements are met.

METAL ROOFING BY AMERICAN METAL SUPPLY

PANEL TYPES

American Metal Supply manufactures two panel types, an exposed fastener panel and a standing seam panel.

EXPOSED FASTENER: Known for their classic metal roof style, exposed fastener metal roofs have been common in residential and agricultural applications for decades. Featuring the distinctive look of exposed fasteners and visually appealing linear patterns, these panels offer a balance between strength and aesthetics. Rib heights vary from ±1/2" to 1-1/4" tall, with up to 36" panel coverage depending on the panel. Ideal for residential and light commercial applications.

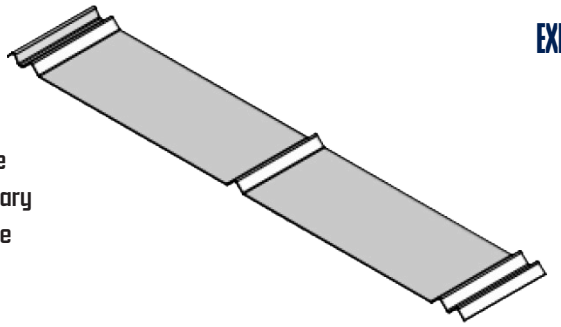

EXPOSED FASTENER

STANDING SEAM: When the utmost water-protection and performance against the damaging most conditions is required, standing seam provides a premium quality roof with hidden fasteners. These panels are available in rib heights ranging from 1" - 2" with panel coverage up to ±18", and make a great choice for high-end residential or commercial use. Available flat or with striations.

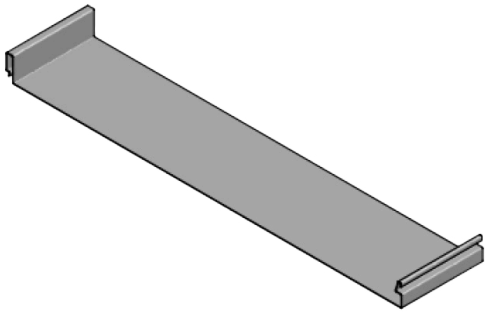

STANDING SEAM

METAL OPTIONS

American Metal Supply maintains a robust inventory of steel and aluminum coils to provide fast and quality metal roof panels.
5V Crimp is available in 24ga, 26ga and 29ga, while the standing seam is available in 24ga/26ga steel, and 0.032" and 0.040" aluminum.

PAINT AND COLOR OPTIONS

Steel panels are available in unpainted or "mill finish." All steel panels are coated with galvalume finish (an aluminum-zinc alloy with rust protection superior to galvanized steel). Steel panels are also available painted with SMP (silicone modified polyester) or PVDF (polyvinylidene fluoride), one common trade name is Kynar®. Aluminum panels are available with PVDF paint.

GENERAL INSTRUCTIONS

STORAGE AND HANDLING

While metal roof panels are designed to provide watertight protection for a roof, they are not designed to hold standing water for an extended amount of time. It is important that panels be kept dry during storage. Storing panels under cover is ideal, but when this is not possible, be sure to elevate one end of a panel stack to allow positive drainage. Do not allow water to pond on the panels or be caught between panels, and do not store in contact with the ground. Do not store panels in the vicinity of saltwater, corrosive chemicals, pressure treated lumber, fertilizer, or other chemicals.

Some panels or trim may be delivered with a protective plastic film—do not store these items in direct sunlight, and be sure to remove the film within 15 days of delivery.

When moving longer panels, two lift points may be required—always keep the full length of the panel supported.

TOOLS REQUIRED

Most metal panels are designed to be supported by a deck—be careful when lifting and moving panels to avoid bending or twisting the panels.

RECOMMENDED TOOLS INCLUDE:

- Screw gun and drill bits. Use of impact drivers may void warranty for fasteners, and will likely result in stripping a plywood deck.
- Tin snips or nibbler. American Metal Supply does not allow the use of any type of saw or grinder to cut metal panels or trim—this will void any warranties and is likely to degrade the protective galvalume layer.
- Measuring tape and chalk line. Chalk the roof deck only—chalking the panels is not recommended, and American Metal Supply cannot guarantee that chalk will be removable from panels.

  For Standing Seam Only: Pop rivet tool and hemming tool; locking pliers are an optional tool that may also be helpful.

SAFETY

Safety is always the highest priority. Be sure to comply with all OSHA and other safety recommendations related to fall or other hazards. Some things to keep in mind specifically regarding metal roofing:

- Do not install metal panels on windy days—at the right angle, the wind can turn a metal panel into a sharp metal sail.
- Metal roofing can be very slick when wet, even just from overnight dew. Avoid working on metal roofs when wet.
- Metal roofing can also be very hot in direct sunlight—wear gloves and/or long pants/knee protection to prevent burning.
- Wear soft soled shoes to provide better traction and avoid scratching the panels.
- Do not step on panels before they have been completely secured to the roof deck—an unsecured panel may slide down the roof.
- For standing seam panels, do not step on the panel ribs—only the flat part of the panel.

INSTALLATION: GETTING STARTED

PREPARING THE ROOF DECK

The typical roof assembly consists of: roof trusses/rafters, sheathing (plywood/OSB/etc), underlayment, and metal panels. This manual only covers the installation of metal panels; be sure to follow building codes or other manufacturer instructions if installing any other roof components.

SOME THINGS TO KEEP IN MIND::

- Any deck openings (e.g. ridge vents, pipe vents, etc.) should be cut before installing metal panels.
- Check the roof deck for flatness, protruding nails, or any other abnormality. Generally speaking, the panels will match the shape of the roof deck—a wavy or bumpy roof deck will result in a wavy or bumpy metal roof.
- The deck must be square and true—check with a 3-4-5 triangle. Trim can cover a small amount of out-of-square (±1-3"), but may result in mis-aligned lines and degrade the overall aesthetic of the roof.

TYPICAL INSTALLATION PROCESS

Specific conditions may require a different process, but typically the eave drip, valley trim, and transition trims are installed with the underlayment during dry-in. Once panels are installed, ridge and hip caps, gable trims, and end + side wall trims are installed. In general, items should be installed top to bottom to ensure proper water runoff.

SETTING THE FIRST PANEL

Setting the first panel correctly is important to ensure all other panels are lined up. Typically, the installation begins at the gable end opposite the direction of any prevailing wind. (E.g. for a beach house, if most rain comes off the ocean, start on the side away from the ocean.) A common method is to measure a panel width from the gable at the ridge and at the eave, chalk a line, and use this to set the first panel. Note that most panels have a specific overlap (female leg) and underlap (male leg) side.

INSTALLATION: FASTENING AND CUTTING

FASTENING METAL PANELS

In the state of Florida, metal roofing must be tested and approved to specific standards. In most cases, the cause of failure is when fasteners pull out of the plywood. **This makes correct installation of the fasteners the most important element of ensuring the panel can resist the wind.** A common problem is overtightening fasteners—in thin plywood, overtightening will strip out the plywood decking as a result of just one or two extra turns. In other words; **overtightening fasteners will result in a roof panel that cannot resist the wind as well as it should.**

For exposed fastener panels, use a fastener with a sealing washer. Be sure the sealing washer is seated tightly, but does not squeeze out from under the metal washer. Both over and under tightening are likely to create watertightness issues.

For all panels, install the number, type, and spacing of fasteners as required by the applicable product approval.

Installing fasteners will produce small metal savings as the fastener taps through the metal panel. Always remove all metal shavings/fragments from the roof immediately. Failing to remove these shavings will result in rusting and will void any warranty.

FIELD CUTTING METAL PANELS

Use tin snips or an electric nibbler/shear tool to cut metal panels in the field. **American Metal Supply does not permit the use of circular saws, reciprocating saws, or other abrasive cutting tools.** These tools will create significant heat which can burn the panel coating and will produce tiny, hot metal particles which may will burn into the panel. Either case will result in premature rust and corrosion of the panels, and void any warranties.

REROOFING

It is generally best to remove any existing roofing (shingles, etc.) before installing metal roof panels. This allows for an inspection of the roof deck and underlayment, and replacement of any damaged areas as needed. It is also important to provide a flat and smooth deck for the metal roof panels.

When a project requires installation over existing roofing, most building codes allow this when certain conditions are met. Check the applicable building code if needed. To install over existing roofing, consider the following:

- Inspect the roof for defects and be sure the surface is flat, level, and smooth. Repair existing roofing and/or sheathing as needed.
- Check for nails or other protrusions and remove. Remove any debris (leaves, moss, etc).
- In most cases, remove the ridge and hip cap, and flashing around vents or pipes.
- Cover the deck with an approved underlayment, installed per the applicable code provisions and manufacturer's instructions.
- Install metal panels and trim.

CARE AND MAINTENANCE

All roofs will require some amount of periodic maintenance. Some annual maintenance items to consider:

- Clean gutters to prevent water backup that could wick back under the eave drip.
- Be sure valleys and other waterways on the roof are clear of leaves or other debris. Any area where water can pool (or wet leaves gather) presents a risk to the roof.
- Look for any loose flashing, panels or fasteners. Check for hail damage or damage from other falling objects (branches, etc.).
- Look carefully around chimneys, vents, and the areas around HVAC units; these can expose the roof to chemicals which may cause rust or other issues.
- Check any areas with sealant—sealant almost always degrades before the metal itself.
- Trim back trees that are touching or overhanging the roof.
- For exposed fastener roofing systems, check the fasteners across the roof. Look for any fasteners which may have "backed out" over time as the panels expand and contract. Also check for any fasteners where the washers have degraded. Re-tighten or replace fasteners as required. Often, when replacing fasteners, the next largest fastener may be required (e.g. replacing a #10 fastener may require a #12 fastener).

TRIM DETAILS: **EAVE** NOT TO SCALE

EXPOSED FASTENER

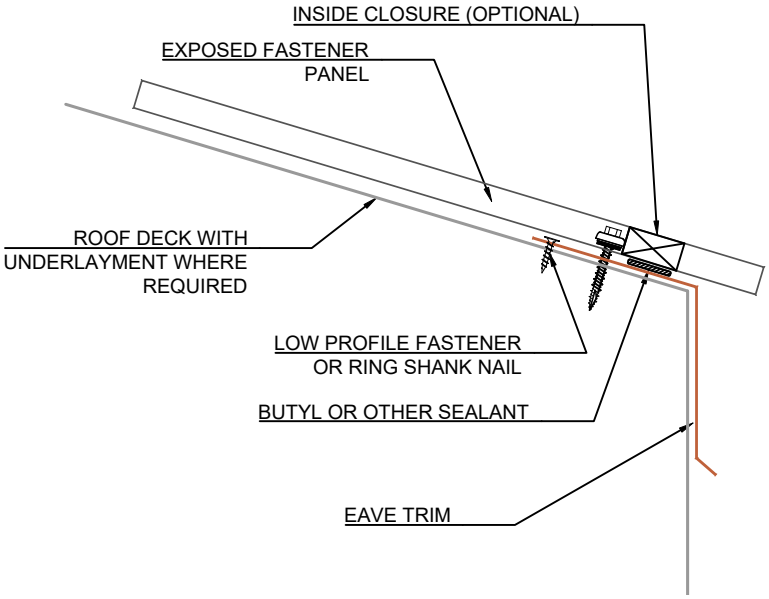

STANDING SEAM

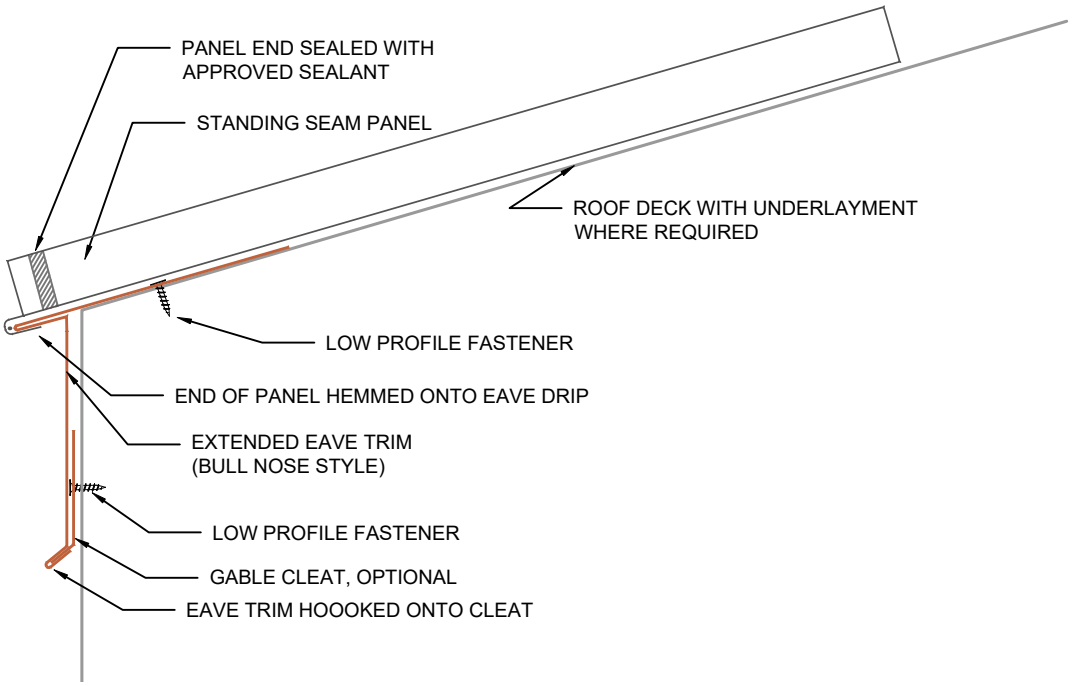

TRIM DETAILS: **RIDGE OR HIP** NOT TO SCALE

EXPOSED FASTENER

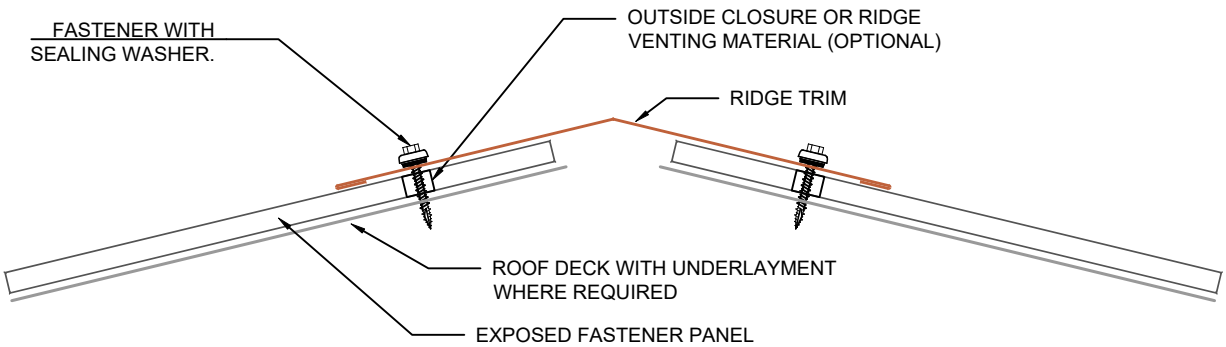

STANDING SEAM

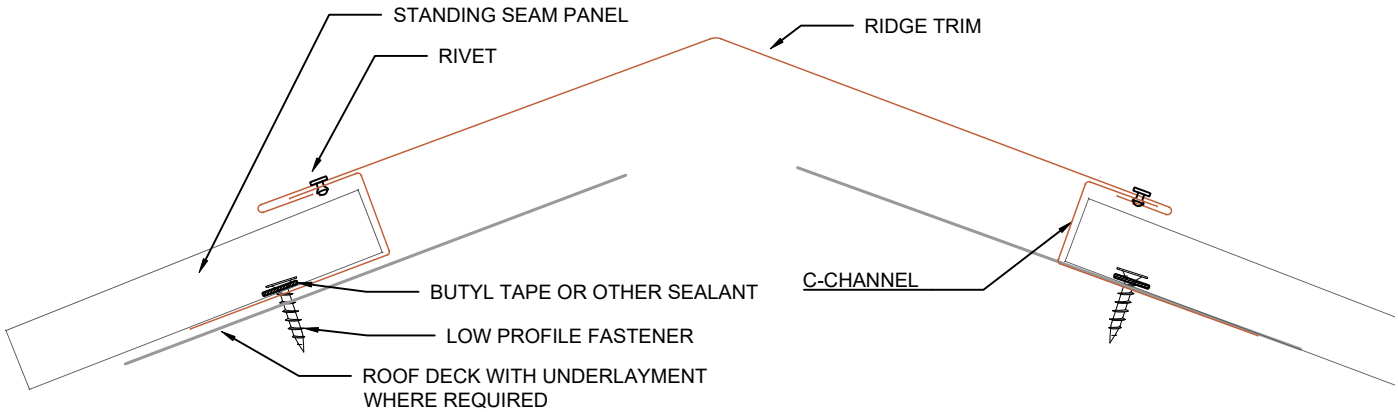

TRIM DETAILS: **RIDGE (HIGH SIDE)** NOT TO SCALE

EXPOSED FASTENER

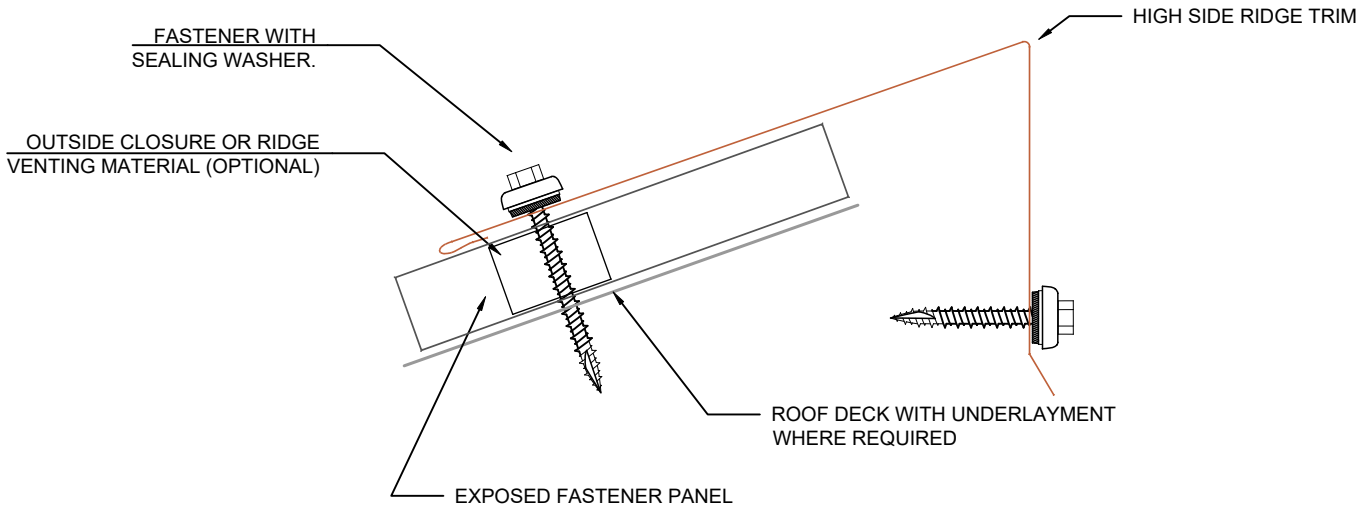

STANDING SEAM

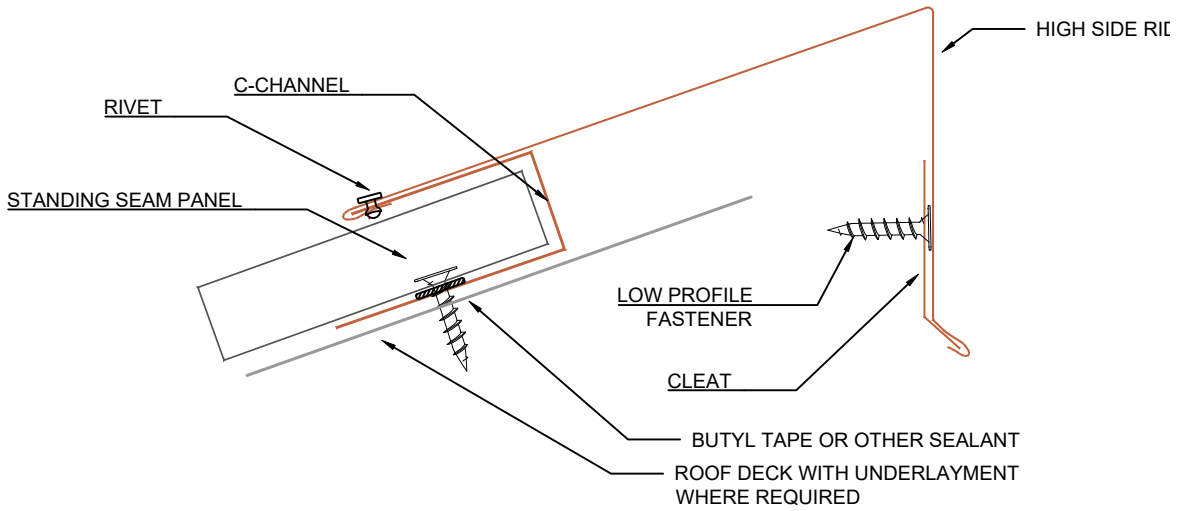

TRIM DETAILS: **GABLE RAKE** NOT TO SCALE

EXPOSED FASTENER

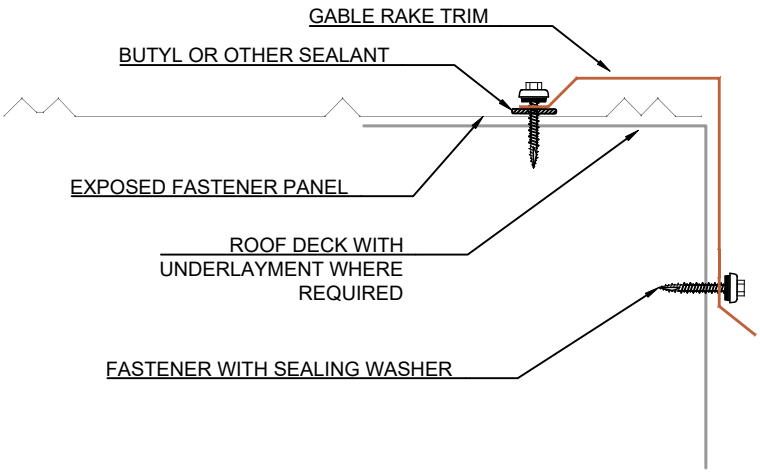

STANDING SEAM

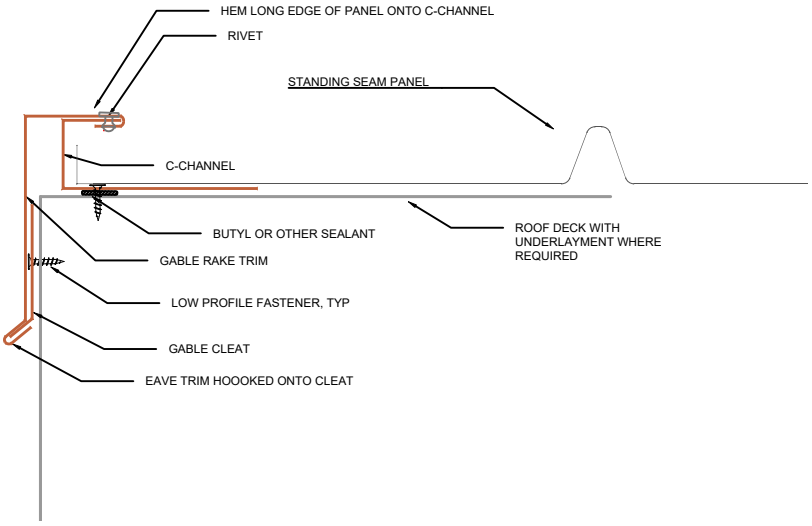

TRIM DETAILS: **VALLEY** NOT TO SCALE

EXPOSED FASTENER

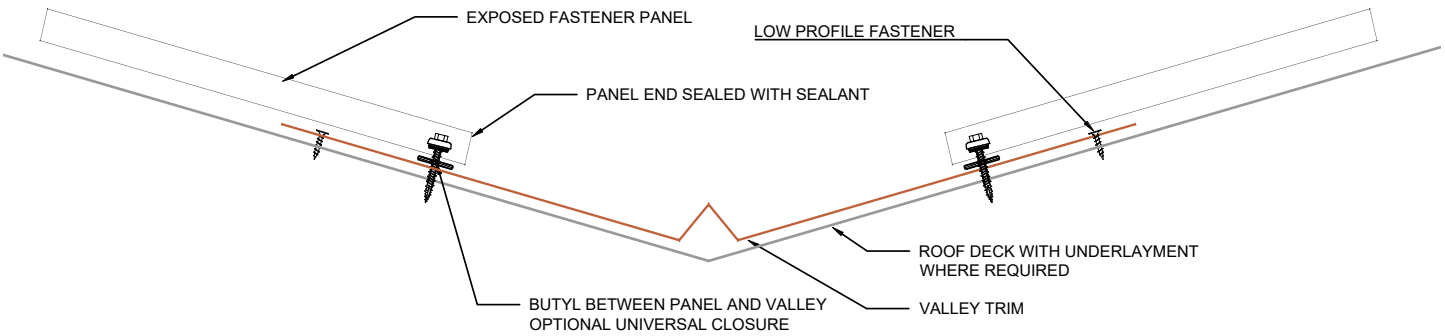

STANDING SEAM

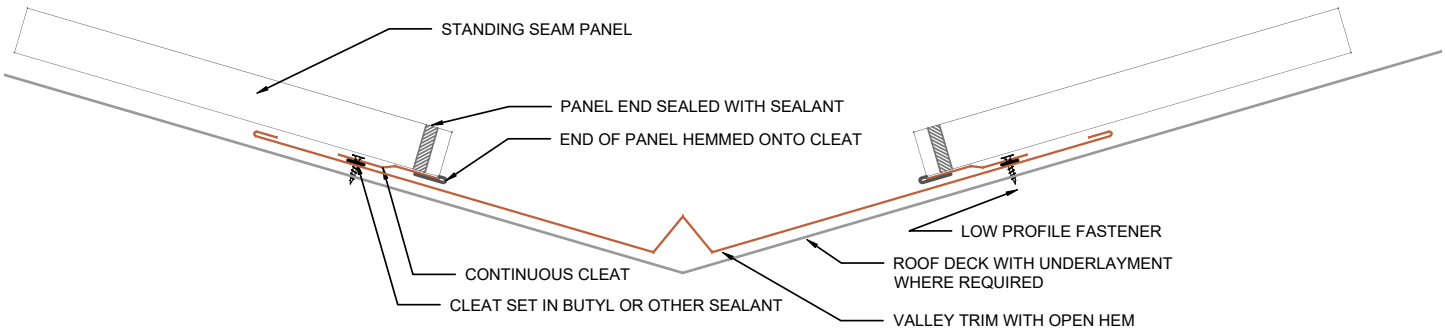

TRIM DETAILS: **TRANSITION** NOT TO SCALE

EXPOSED FASTENER

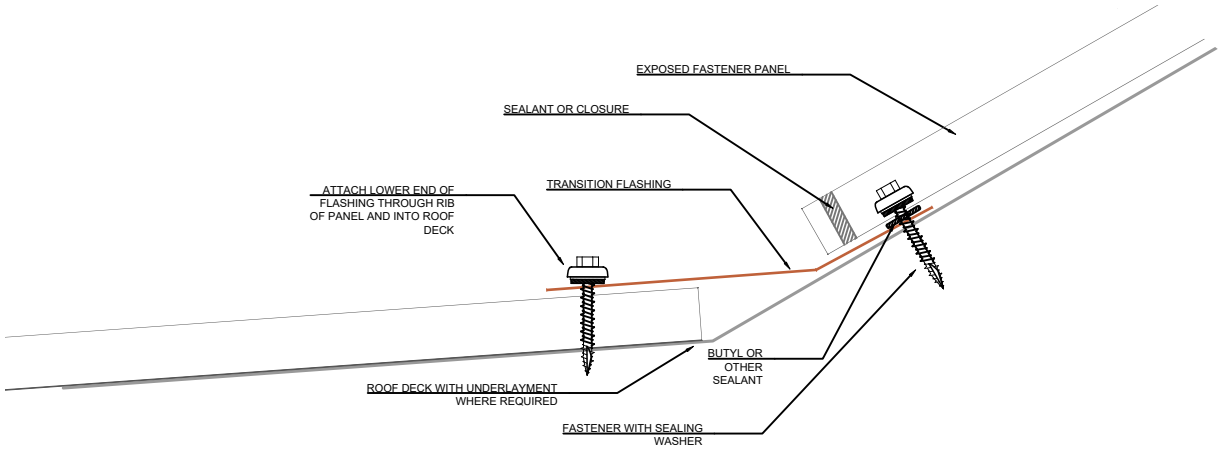

STANDING SEAM

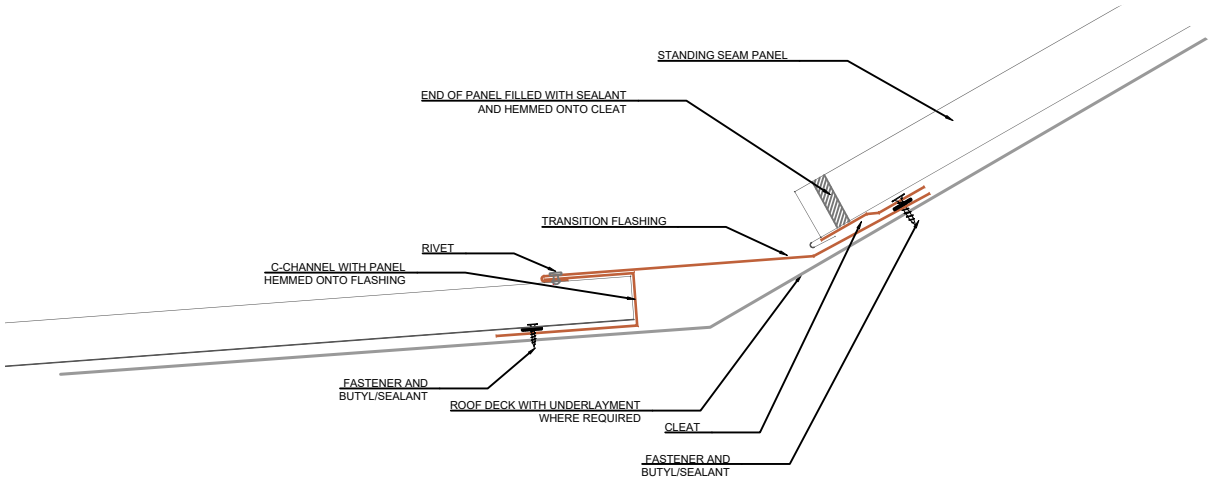

TRIM DETAILS: **SIDEWALL** NOT TO SCALE

EXPOSED FASTENER

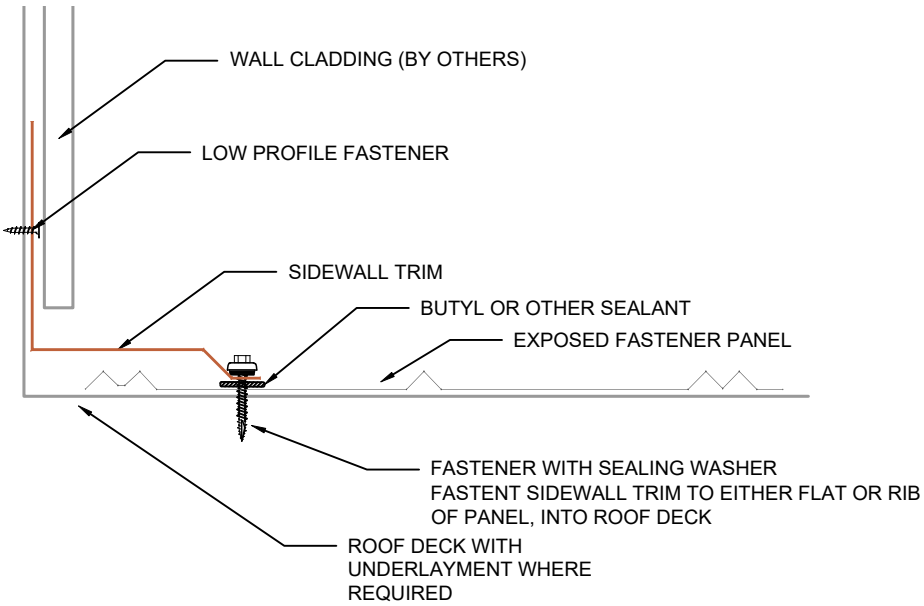

STANDING SEAM

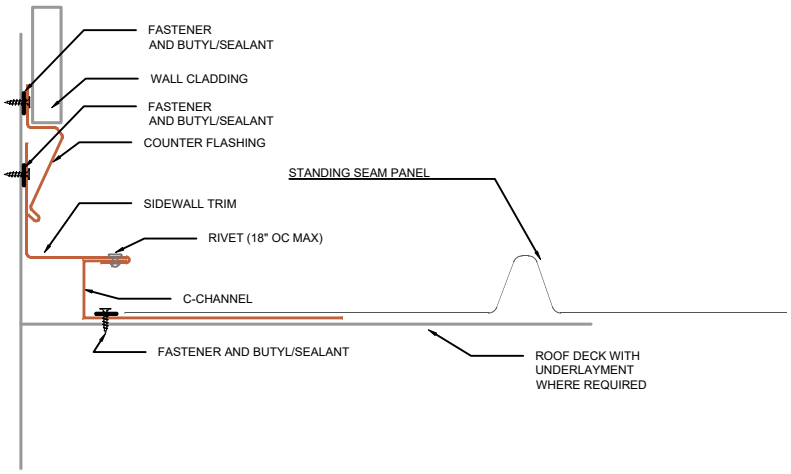

TRIM DETAILS: **ENDWALL** NOT TO SCALE

EXPOSED FASTENER

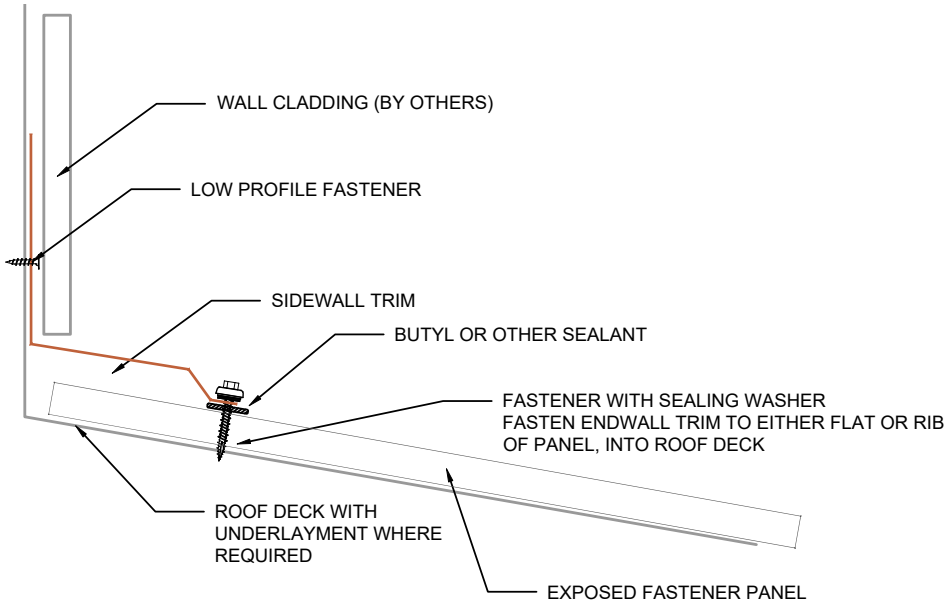

STANDING SEAM

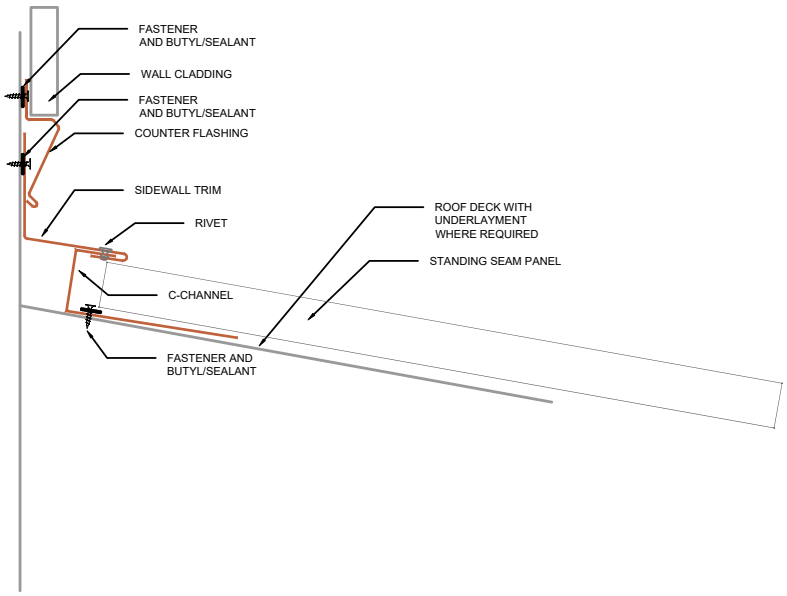

FLORIDA'S TOP-RATED METAL ROOFING SUPPLY COMPANY

GET A QUOTE TODAY

863.202-8200 · AMERICANMETALFL.COM